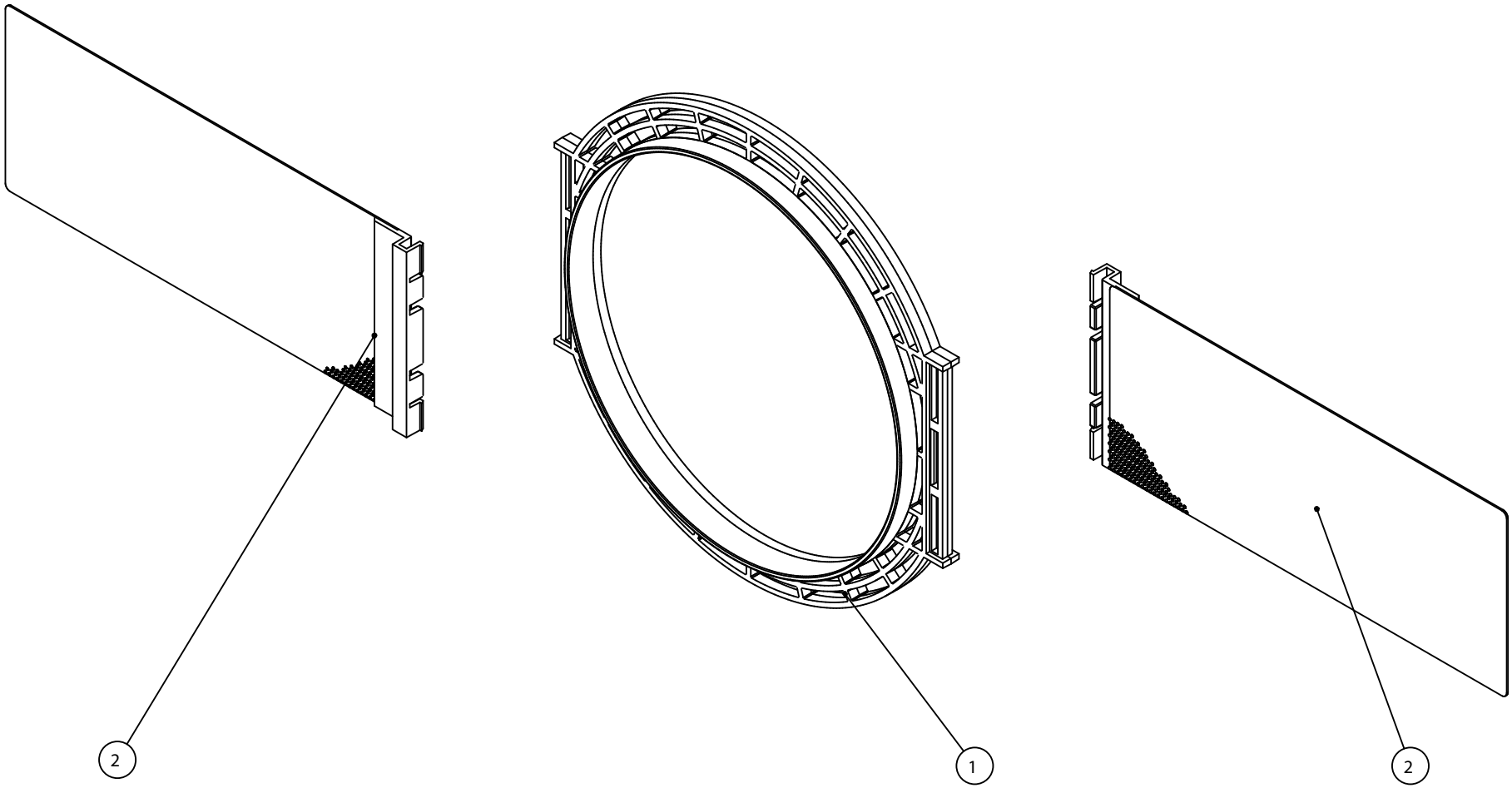


| ITEM | QTY | DESCRIPTION | PART NUMBER |
|---|---|---|---|
| 2 | 2 | PMK W6-C6-W8-C8 WING - A7578 | MM03513 |
| 1 | 1 | PMK C6 FRAME - A7575 | MM03483 |

DO NOT SCALE

B&W Bowers & Wilkins

DIMENSIONS IN mm

TOLERANCES
0. ± 0.5
0.0 ± 0.3
0.00 ± 0.1
ANGLES ± 0.5°
UNLESS OTHERWISE STATED

MATERIAL
SEE ITEMS LIST

FINISH
N/A

| ISS | AMENDMENT | ECN NO. | DATE | APPROVAL |
|---|---|---|---|---|

TITLE
PMK C6 ASSEMBLY

COPYRIGHT C 2005

DRAWN GMP
DATE 14-9-05
CHECKED / APPROVED

SCALE 1:2
FULL DRG SIZE A3

PART NO.
FP25353

DRG. NO.
A7571-1-1

ISS
1